STARGATE

RUGGED RACK MOUNT / SWING–OUT LCD

The StarGate's advanced swing-out design gives back valuable space in rack mount applications where space is at a premium. This state of the art rugged display mounts directly to the front of the RETMA rails allowing you to swing open the display for access to items mounted behind the panel.

Only 5.5" deep and 15.75" (9U) in height, the StarGate is available in 20.1" and 21.3" active display area. Featuring up to 1600 x 1200 pixel resolution, the StarGate display plugs-and-plays with any workstation, PC or X Terminal and with active-matrix LCD technology it provides astounding color and clarity.

Fully sealed in a lightweight rugged aluminum enclosure, the thin StarGate is ideal for a broad range of applications including engineering workstations, airborne, shipboard, C4I, mapping and imaging systems.

In addition, the StarGate features a user removable protective lens, front control panel, and low power usage that extends the life of the display.

Highlights

- 20.1" active display area
- High resolution 1600 x 1200
- Space saving swing-out design
- Available in right hinge model
- Rugged lightweight packaging
- Dual locks hold the StarGate firmly to the front of rack
- Up to 1 Picture in Picture (PiP) daughter card
- Integrates with any workstation, PC and X Terminal
- Multiple synchronization capability
- Removable protective lens (optional)
- Applications include: Shipboard, Airborne, Field Deployments, Industrial, Lab
- Compatibility: Sun, SGI, DEC, IBM, PC, Mac

Z Microsystems

SPECIFICATIONS

Stargate Display

LCD Panel

Size:	20.1”
Display Type:	AMLCD
Resolution:	Up to 1600 x 1200 @ 60 Hz
Video Input:	Analog RGB 0.7Vp-p/75 Ohm Pos.
Separate sync:	TTL level
Horizontal sync:	Positive/Negative
Vertical sync:	Positive/Negative
Sync on Green:	Video 0.3 Vp-p Negative
Pixel Frequency:	Up to 135 MHz
Color Palette:	True Color
Contrast Ratio:	100:1, typical
Pixel Pitch:	.312 mm x .312 mm
Luminance:	250 cd/m2 (typical)
Diagonal Dim.:	20.1”
Horizontal:	15.7 (399 mm)
Vertical:	12.6 (319 mm)
Viewing Angle:	Full +/-85º
Control:	H Pos, V Pos, Clock, H Wd, Pwr,
Optical Resp. Time:	15ms (typ.)
Options	Touchscreen, protective lens, 1 Picture in Picture (PiP)

Power

Power Consumption:	110 W (depending on whether the PIP option is installed)
Power Supply:	100 - 240 VAC, 2.0 A, 50/60 Hz, 400 Hz

Cabling

Display:	Standard VGA 15-pin 10’ cable
Options	BNC, DVI and MIL-Circular (call factory to discuss requirements)
Serial Cable	RS232 Serial 6’ 9-pin DSUB provided (pins 2, 3 5 straight through)
Power Cable:	6’ cable, MIL-5015 circular connector, standard (IEC connector optional)

Physical

Size:	15.75”H (9U) x 3.05”D x 19”W
Weight:	Approximately 23 lbs. with no PiP

Environmental*

Operating Temp:	**0º to + 50º Celsius
Non-operating Temp:	-40º to + 70º Celsius
Humidity:	5% to 95% Non condensing
Non-operating Altitude:	Up to 40,000 ft.
Operating Altitude:	Up to 15,000 ft.
Vibration:	MIL-STD-167
Shock:	20 g’s, 11 ms
Fungus:	Non Nutrients/contaminants

Reliability

MTBF:	50,000 Hrs., LCD and Backlight only.
Maintainability:	<30 minutes

Regulatory

Safety:	UL1950 (used as a design guideline)
EMC/RFI:	MIL-STD-461E, RE101 Army Limits, RE102, RS101 RS103 (20v/m 2MHz and 60v/m 1GHz-18GHz), CE101 CS114, CS115, CS116

Quality/Workmanship

IPC / ISO 9001:2000 and applicable section of MIL-HDBK-454

*All environments are Design Goals and are based on test results of other display products.

**Unit will power up and is legible at -20ºC;
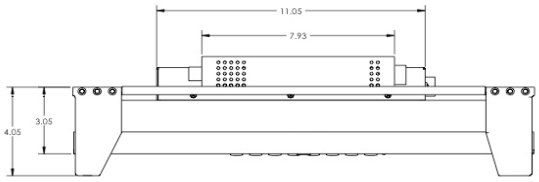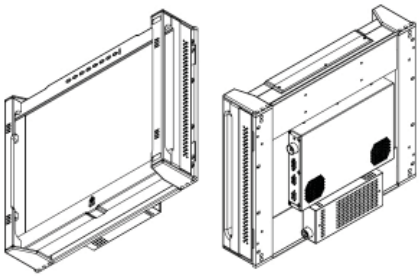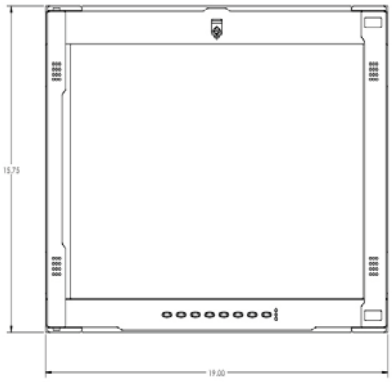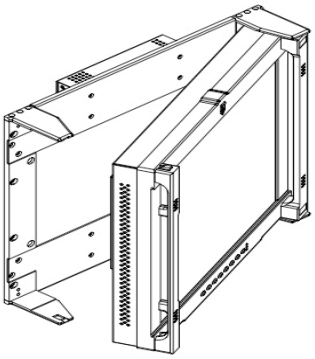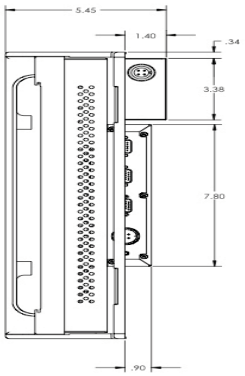
backlight life is reduced.